Avallon

Document Type: Dimensional Drawing
Model: AWC241FD, AWBC241GGFD
Version: 2.0 12052019

Exterior Dimensions

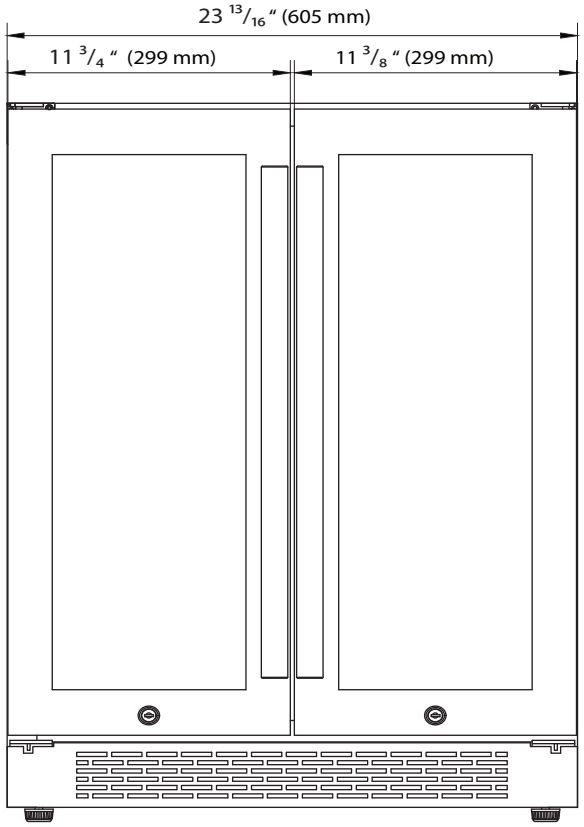

Front View

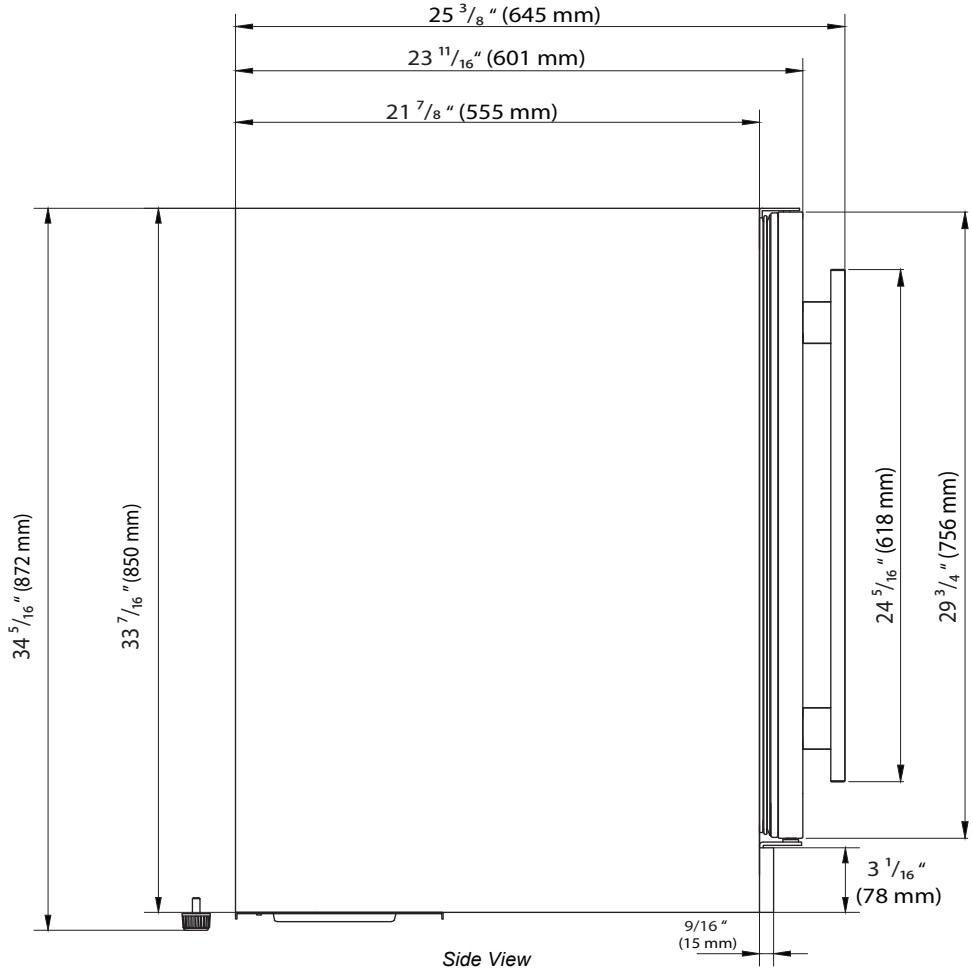

Side View

Avallon, 8606 Wall St, Suite 1600, Austin, TX 78754
www.avallon.com • contact@avallon.com

**Warranty service should be performed by an authorized service representative only.*

Avallon

Document Type: Dimensional Drawing
Model: AFR241SS
Version: 2.0 12052019

Interior Dimensions

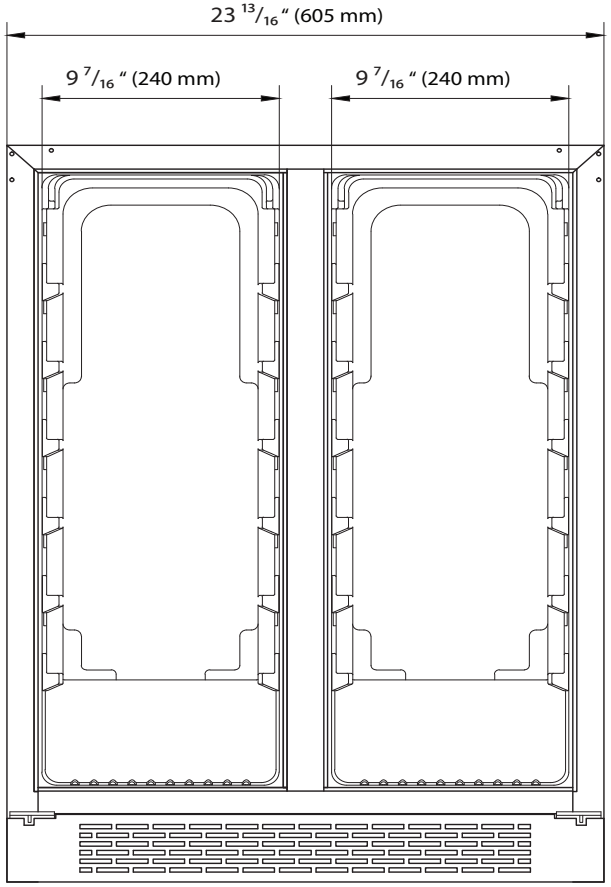

Front View

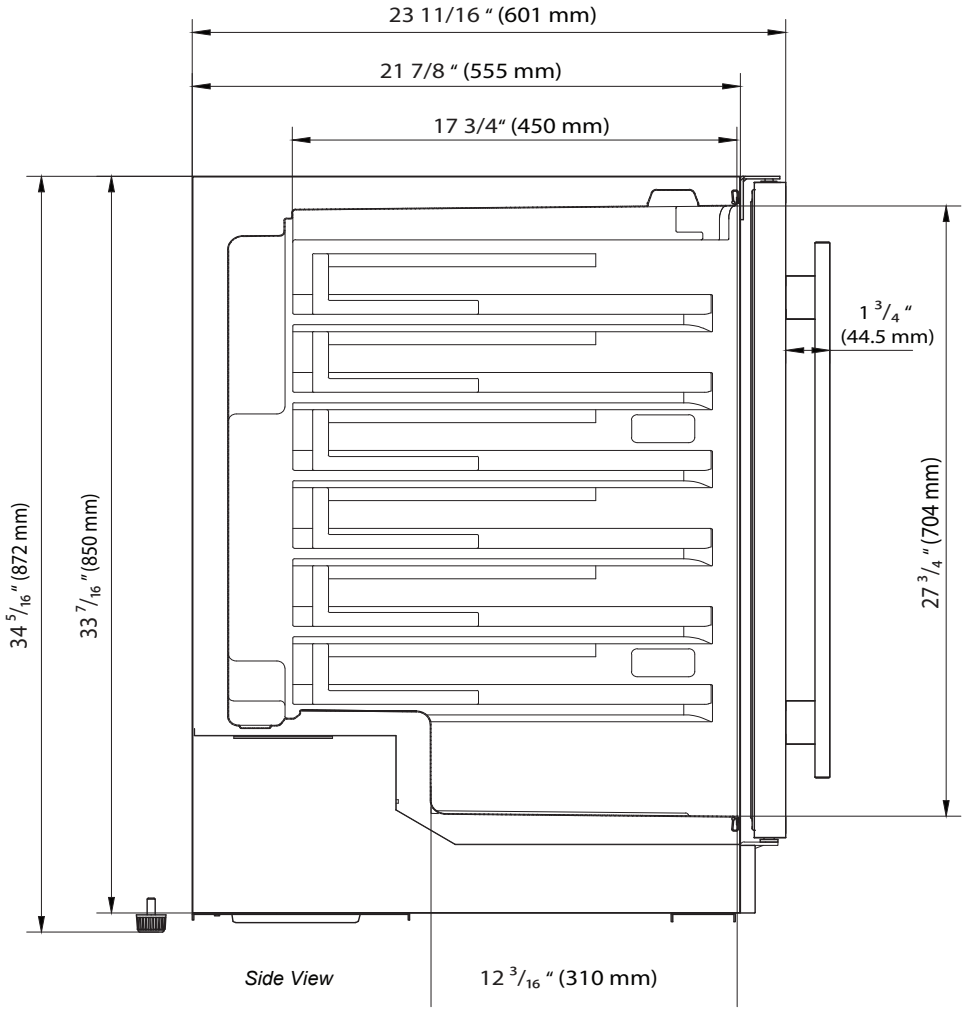

Side View

Avallon, 8606 Wall St, Suite 1600, Austin, TX 78754
www.avallon.com • contact@avallon.com

**Warranty service should be performed by an authorized service representative only.*

Document Type: Dimensional Drawing
Model: AWC241FD, AWBC241GGFD
Version: 2.0 12052019

Door Swing

Note: The unit requires 1/4" clearance on either side when fully recessed to allow the door to open fully.

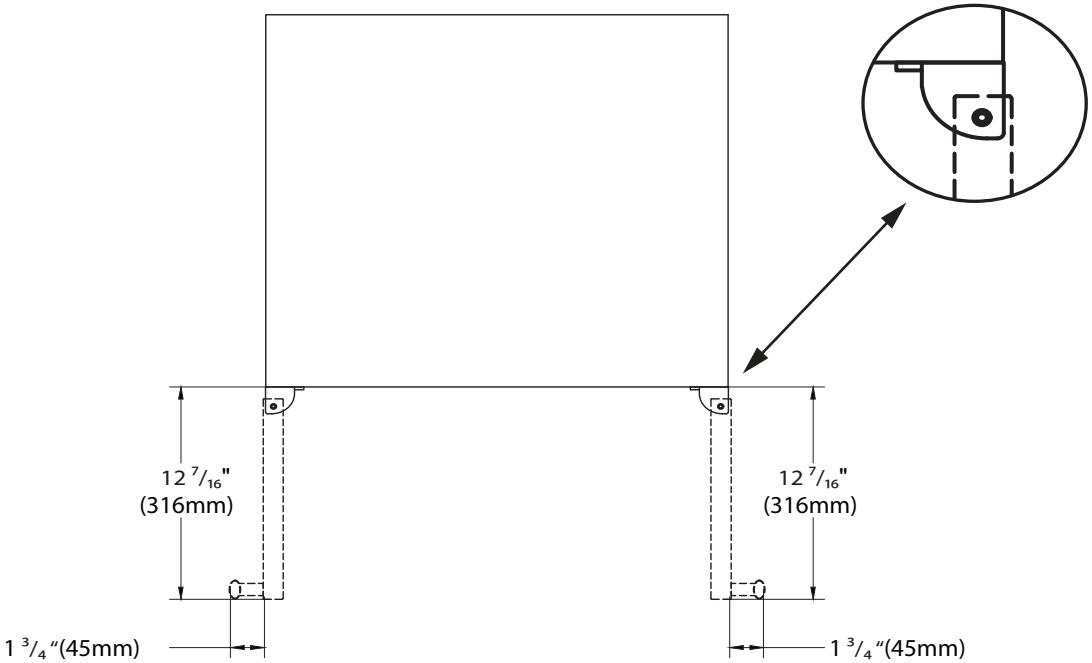

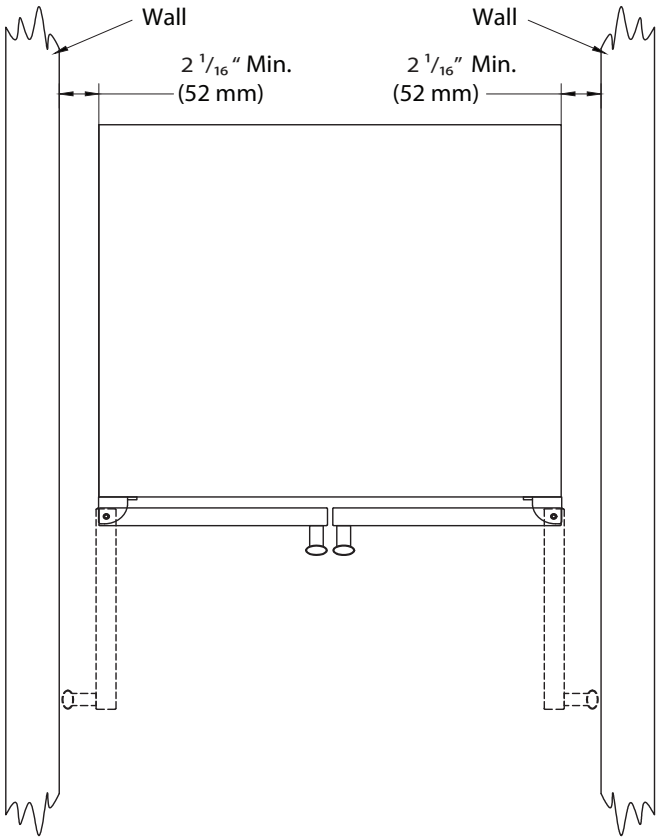

Avallon, 8606 Wall St, Suite 1600, Austin, TX 78754
www.avallon.com • contact@avallon.com

**Warranty service should be performed by an authorized service representative only.*