GENERAL PUMP *A member of the Interpump Group*

2100531

Hose Reel Wall Mounting Kit

WALL MOUNTING KIT 2100531

DIMENSIONS (in/mm)

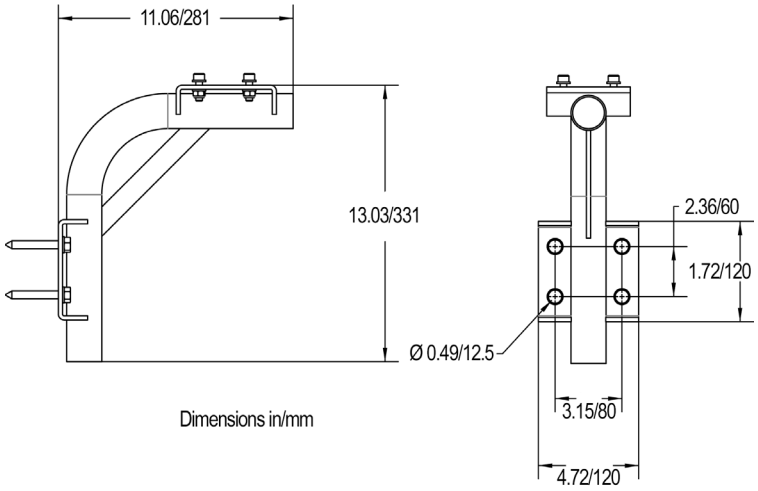

PARTS LIST

Item No.	Part No.	Description	Qty.
1	2550225	BRACKET, WALL MOUNT	1
2	2200054	SHCS	4
3	2200053	NUT, M8x1.25	4
4	2200013	WASHER, M8, SS	8
5	2200078	BOLT, LAG	4
6	2200008	WSHER, FLAT, M10	4

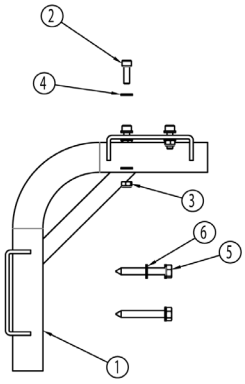

General Pump
is a member of
the Interpump Group

GENERAL PUMP • 1174 Northland Drive • Mendota Heights, MN 55120
Phone: 651.686.2199 • Fax: 800.535.1745 • email: sales@gpcompanies.com • www.generalpump.com

Ref 301045 Rev A
09-20

GENERAL PUMP

ACCESSORIES